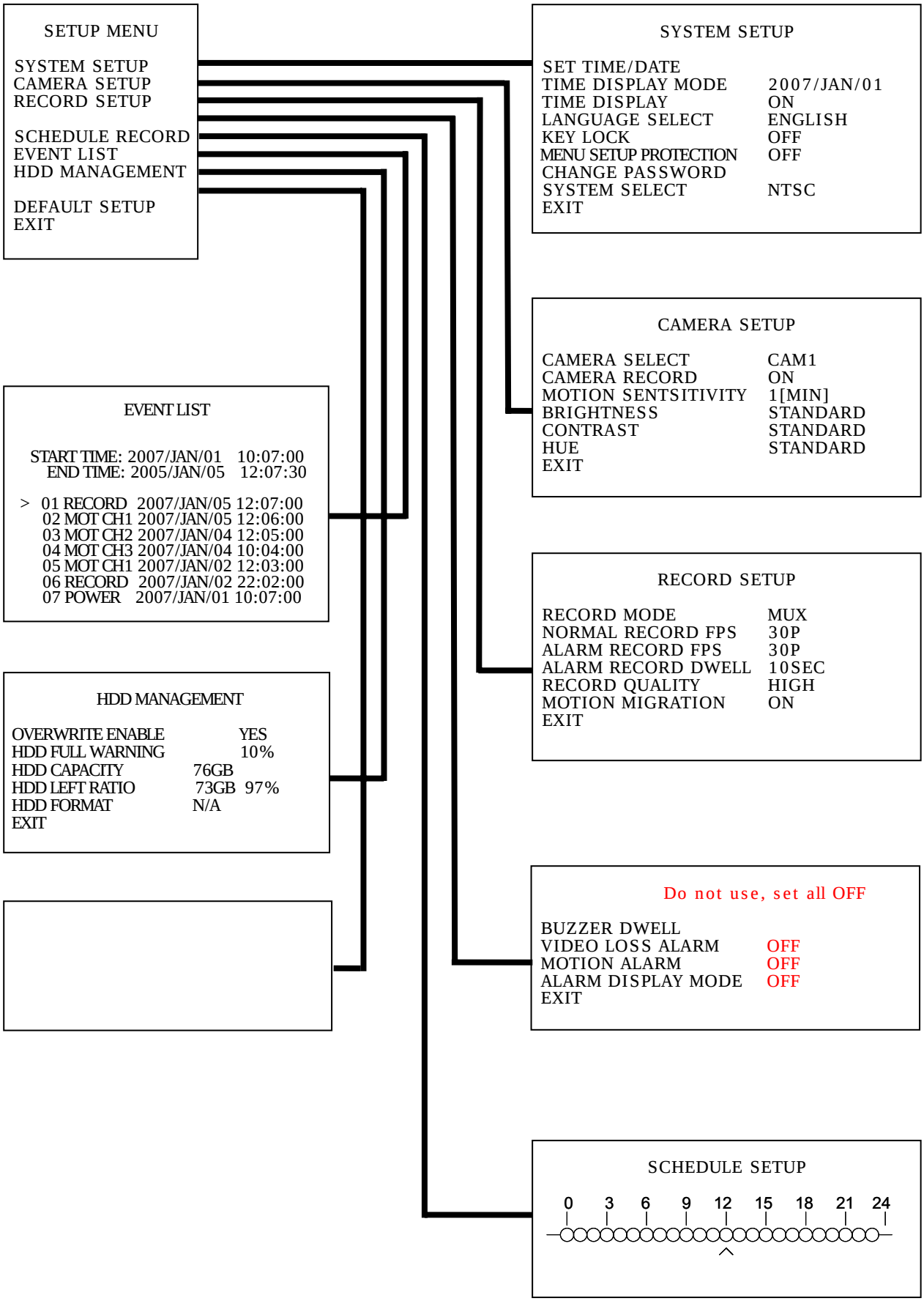
SETUP MENU
SYSTEM SETUP
CAMERA SETUP
RECORD SETUP
SCHEDULE RECORD
EVENT LIST
HDD MANAGEMENT
DEFAULT SETUP
EXIT
SYSTEM SETUP
SET TIME/DATE
TIME DISPLAY MODE 2007/JAN/01
TIME DISPLAY ON
LANGUAGE SELECT ENGLISH
KEY LOCK OFF
MENU SETUP PROTECTION OFF
CHANGE PASSWORD
SYSTEM SELECT NTSC
EXIT
CAMERA SETUP
CAMERA SELECT CAM1
CAMERA RECORD ON
MOTION SENTSITIVITY 1[MIN]
BRIGHTNESS STANDARD
CONTRAST STANDARD
HUE STANDARD
EXIT
EVENT LIST
START TIME: 2007/JAN/01 10:07:00
END TIME: 2005/JAN/05 12:07:30
> 01 RECORD 2007/JAN/05 12:07:00
02 MOT CH1 2007/JAN/05 12:06:00
03 MOT CH2 2007/JAN/04 12:05:00
04 MOT CH3 2007/JAN/04 10:04:00
05 MOT CH1 2007/JAN/02 12:03:00
06 RECORD 2007/JAN/02 22:02:00
07 POWER 2007/JAN/01 10:07:00
RECORD SETUP
RECORD MODE MUX
NORMAL RECORD FPS 30P
ALARM RECORD FPS 30P
ALARM RECORD DWELL 10SEC
RECORD QUALITY HIGH
MOTION MIGRATION ON
EXIT
HDD MANAGEMENT
OVERWRITE ENABLE YES
HDD FULL WARNING 10%
HDD CAPACITY 76GB
HDD LEFT RATIO 73GB 97%
HDD FORMAT N/A
EXIT
Do not use, set all OFF
BUZZER DWELL
VIDEO LOSS ALARM OFF
MOTION ALARM OFF
ALARM DISPLAY MODE OFF
EXIT
SCHEDULE SETUP
0 3 6 9 12 15 18 21 24

DVMR-4e

* www.allthings.com.au

Front Panel Layout Overview

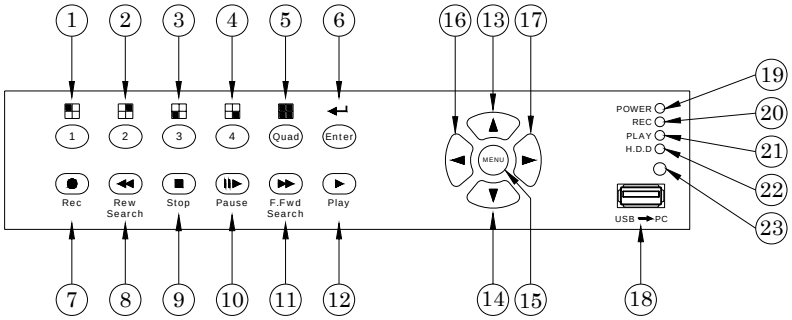

Part	Label	DVR Function	Part	Label	DVR Function
1	1	Channel 1 Full screen & number 1.	2	2	Channel 2 Full screen & number 2.
3	3	Channel 3 Full screen & number 3.	4	4	Channel 4 Full screen & number 4.
5	Quad	Quad: 4 channel display. Default Live View mode.	6	ENTER	Make choose or move into MENU item.
7	Rec	Recording button.	8	Rew Search	×16 fast reward.
9	Stop	Press Stop to stop playback or recording.	10	Pause	Pause & Picture by Picture forward.
11	F.Fwd Search	From ×4, x8, ×16 fast forward.	12	Play	Play button & get into quick time search.
13	▲	Move upward or increase the number.	14	▼	Move downward or decrease the number.
15	MENU	Press MENU to go into or exit menu.	16	◄	Move leftward or decrease the number
17	►	Move rightward or increase the number.	18	USB → PC	USB connector PC Image Backup or View.
19	POWER	Power status LED.	20	REC	Recording status LED.
21	PLAY	Playback status LED.	22	H.D.D	H.D.D LED.
23	IR Receiver	Accept IR Remote Controller			

Back Panel Layout Overview

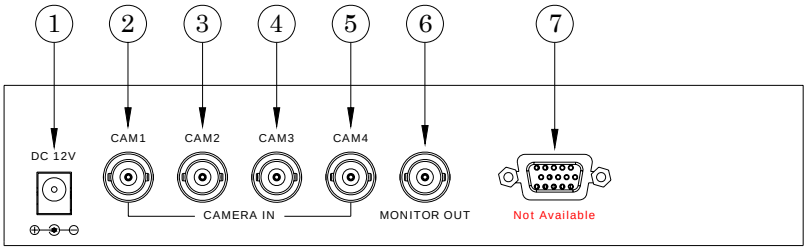

Part	Label	Function
1	Power connector	DC12V Power in, 2.1 x 5.5 mm Socket Center = (+).
2-5	CAM1、2、3、4	Camera 1、2、3、4 video input with BNC connector.
6	MONITOR OUT	Composite video output with BNC connector.

0. LIVE VIEWING

```
REC 30P 2007/JAN/01 10:20:30 MON

        MOT [CAM1]O O[CAM2]
            [CAM3]O O[CAM4]

 231GB/239GB 97% [FULL REC]   MUX
```

←---- STATUS BAR

←---- INFORMATION BAR

STATUS BAR : Press ▲ button move from top or downgrade a line, and how many recording FPS will show on the left upper corner.

INFORMATION BAR : Press ▼ button move from bottom or upgrade a line, by ◄ or ► button to change information between HARD DISK STSTUS, RECORDING MODE and AUDIO RECORDING STATUS.

While MENU mode without press any key would go back to live viewing mode after 2 minutes. And during live viewing for 5 seconds would go back to recording mode automatically, if full time or alarm record set before.

1. MAIN SETUP MENU

```
SETUP MENU

SYSTEM SETUP
CAMERA SETUP
RECORD SETUP
ALARM SETUP
SCHEDULE RECORD
EVENT LIST
HDD MANAGEMENT

DEFAULT SETUP
EXIT
```

Press the **MENU** button to go into the main menu.

Use the ▲ or ▼ button to select items.

Press the ◄ or ► button to confirm the selection.

Press **MENU** to escape to exit the set up mode.

1. **SYSTEM SETUP**
   System set up.
2. **CAMERA SETUP**
   Camera set up.
3. **RECORD SETUP**
   Recording set up.
4. **ALARM SETUP**
   Alarm set up.
5. **SCHEDULE RECORD**
   Schedule Recording set up.
6. **EVENT LIST**
   Recording event list
7. **HDD MANAGEMENT**
   Hard disk management
8. **VGA SETUP**
   VGA display set up.
9. **DEFAULT SETUP**
   Return to factory setting
10. **EXIT**
    Escape from the setup menu

SYSTEM SETUP	
SET TIME/DATE	
TIME DISPLAY MODE	2007/JAN/01
TIME DISPLAY	ON
LANGUAGE SELECT	ENGLISH
KEY LOCK	OFF
MENU SETUP PROTECTION	OFF
CHANGE PASSWORD	
SYSTEM SELECT	NTSC
EXIT	

Press ▲ or ▼ key on "SYSTEM SETUP" & ◀ or ▶ to enter:

Use the ▲ or ▼ button to select items.

Press the ◀ or ▶ button to confirm the selection.

Press MENU back to SETUP MENU.

a. **SET TIME/DATE**

Use ◀ or ▶ button to move, ▲ or ▼ button to set up date & time, by **MENU** key back to menu.

b. **TIME DISPLAY MODE**

Use YY/MM/DD format ONLY.

c. **TIME DISPLAY** **ON/OFF**

Use ◀ or ▶ button to change ON or OFF.

d. **LANGUAGE SELECT** **ENGLISH**

Use ◀ or ▶ button to change language.

e. **KEY LOCK** **ON/OFF**

Use ◀ or ▶ button to change ON or OFF.

f. **MENU SETUP PROTECT** **ON/OFF**

Use ◀ or ▶ button to change ON or OFF.

g. **CHANGE PASSWORD**

Key in password with following sequence CURREBT PASSWORD -> NEW PASSWORD -> CONFIRM PASSWORD. Initial number is 1111. Use the view control button on the front panel to input the number. is "1" , is "2" , is "3" , is "4"

h. **SYSTEM SELECT** **NTSC/PAL**

Use ◀ or ▶ button to change NTSC or PAL video system.

CAMERA SETUP	
CAMERA SELECT	CAM1
CAMERA RECORD	ON
MOTION SENSITIVITY	1[MIN]
BRIGHTNESS	STANDARD
CONTRAST	STANDARD
HUE	STANDARD
EXIT	

Press ▲ or ▼ key on "CAMERA SETUP" & ◄ or ► to enter:

Use the ▲ or ▼ button to select items.

Press the ◄ or ► button to confirm the selection.

Press MENU back to SETUP MENU.

a. **CAMERA SELECT** **CAM1 / CAM2 / CAM3 / CAM4**

Use ◄ or ► button to select the camera from CH1 – CH4 to be adjusted.

b. **CAMERA RECORD** **ON / OFF**

Use ◄ or ► button to select recording function ON or OFF.

c. **MOTION SENSITIVITY OFF / 1[MIN] / 2 / 3 / 4 / 5[MAX]**

Use ◄ or ► button to adjust the sensitivity of the selected camera. From 0 (off) to 5 (MAX).

d. **BRIGHTNESS** **1 / 2 / 3 / 4 /STANDARD/ 6 / 7 / 8 / 9 /10**

Use ◄ or ► button to adjust the brightness of the selected camera. Initial number is 5 (STANDARD).

e. **CONTRAST** **1 / 2 / 3 / 4 /STANDARD/ 6 / 7 / 8 / 9 /10**

Use ◄ or ► button to adjust the contrast of the selected camera. Initial number is 5 (STANDARD).

f. **HUE** **1 / 2 / 3 / 4 /STANDARD/ 6 / 7 / 8 / 9 /10**

Use ◄ or ► button to adjust the hue of the selected camera. Initial number is 5 (STANDARD).

RECORD SETUP	
RECORD MODE	MUX
NORMAL RECORD FPS	30P
ALARM RECORD FPS	30P
ALARM RECORD DWELL	10SEC
RECORD QUALITY	HIGH
MOTION MIGRATION	ON
EXIT	

Press ▲ or ▼ key on "RECORD SETUP" & ◄ or ► to enter:

Use the ▲ or ▼ button to select items.

Press the ◄ or ► button to confirm the selection.

Press MENU back to SETUP MENU.

a. **RECORD MODE MUX/QUAD**

Use ◄ or ► button to select MUX (multiplexer) or OD (QUAD) recording.

NORMAL RECORD FPS 1/2/3/4/5/7/10/15 & 30P

Use ◄ or ► button to select recording speed. 15P means 15 fields per second, 30P is the highest speed, and 1P is the lowest. There are 1 / 2 / 3 / 4 / 5 / 7 / 10 / 15 & 30 you can choose, NTSC default 15P, PAL at 12P.

b. **ALARM RECORD FPS 1/2/3/4/5/7/10/15 & 30P**

Use ◄ or ► button to select alarm recording speed when external alarm or motion detection is triggered. There are 1 / 2 / 3 / 4 / 5 / 7 / 10 / 15 & 30 you can choose, NTSC default 30P, PAL at 25P.

c. **ALARM RECORD DWELL1~30SEC**

Use ◄ or ► button to set the dwell time for alarm recording when motion detection is triggered. There are a total of 30 speeds you can choose from 1 to 30. When Motion is triggered and within the dwell period: the screen will be switched into quad mode. The corresponding camera will be marked ID "MOT", default 10 seconds..

d. **RECORD QUALITY BEST/HIGH/MEDIUM/LOW**

Use ◄ or ► button to select the BEST, HIGH, MEDIUM or LOW recording quality that can be chosen from. The amount of storage will be consumed with higher quality. Thus, this setting should be carefully chosen for hard disk volume. A table at cheap 6 for relationship between quality, recording speed and hard disks for reference.

e. **MOTION MIGRATION ON**

Use ◄ or ► button to select add detected motion into event list or not, and the default setting is on.

Do not use, set all OFF

BUZZER DWELL
VIDEO LOSS ALARM OFF
MOTION ALARM OFF
ALARM DISPLAY MODE OFF
EXIT

Press ▲ or ▼ key on "ALARM SETUP" & ◄ or ► to enter:

Use the ▲ or ▼ button to select items.

Press the ◄ or ► button to confirm the selection.

Press **MENU** to go back to SETUP MENU.

a. **BUZZER DWELL**

b. **VIDEO LOSS ALARM** **OFF**

c. **MOTION ALARM** **OFF**

d. **ALARM DISPLAY MODE** **OFF**

6. SCHEDULE RECORD

SCHEDULE SETUP

0 3 6 9 12 15 18 21 24

[RIGHT,LEFT] TO MOVE [MENU TO EXIT]
[UP,DOWN] TO SELECT

Press ▲ or ▼ key on "SCHEDULE RECORD" & ◄ or ► to enter:

Use the ◄ or ► button to select items.

Press the ▲ or ▼ button to confirm the selection.

Press **MENU** to go back to SETUP MENU.

There are 24 circles in the schedule table, which represent 24 hours.

Every circle has 3 options to select:

O : represents "fully record"

X : represents "no record"

A : represents "alarm record"

Use the ◄ or ►button to select hours.

Press ▲ or ▼ button to select the **O / X / A** (Fully / No / Alarm Record).

QUICK KEY:

► **Play** Key to switch between **O** / **X** / **A** (Fully / No / Alarm Record) in all hours.

```
EVENT LIST

START TIME: 2007/JAN/01 12:07:06
  END TIME: 2007/JAN/05 12:07:30

>01 RECORD     2007/JAN/05 10:07:06
 02 MOT CH1    2007/JAN/05 12:06:18
 03 MOT CH2    2007/JAN/04 12:05:22
 04 POWER      2007/JAN/03 22:04:45
 05 RECORD     2007/JAN/03 12:03:00
 06 RECORD     2007/JAN/02 05:02:34
 07 POWER      2007/JAN/01 12:07:06
```

Press ▲ or ▼ key on "EVENT LIST" & ◄ or ► to enter:

Use the ◄ or ► button to select items.

Press the ▲ or ▼ button to confirm the selection.

Press MENU back to SETUP MENU.

Use "▲ or ▼" key to select event which needs to be played，location of **" > "** symbol will move up and down for indicating current event which been selected.

Press "◄ or ►" key to select events storage from master hard drive or slave hard drive. When once selection has been made and than press **►PLAY** key to start playback.

There are totally 3 different type's event will be recorded:

1. RECORD：Event starts recording by press "REC" key.
2. POWER：**When power off or loss, system would add this issue, and "POWER ERROR DETECTED" would show on screen while boot.**
3. MOT CH1：When motion detection was triggered, event up with alarm number.

Record setup "MOTION EVENT MIGRATION" must at ON.

In the period of alarm record triggered constantly that the a single EVENT LIST item will be extend while lapsed, thus ENET LIST would show the first triggered channel number on the list and the recording seconds will be extended .

8. HDD MANAGEMENT

```
HDD MANAGEMENT

OVERWRITE ENABLE              YES
HDD FULL WARNING        10%
HDD CAPACITY 76GB
HDD LEFT RATIO      73GB 97%
HDD FORMAT   N/A
EXIT
```

Press ▲ or ▼ key on "NETWORK SETUP" & ◄ or ► to enter:

Use the ◄ or ► button to select items.

Press the ▲ or ▼ button to confirm the selection.

Press **MENU** back to SETUP MENU.

a. OVERWRITE MODE YES (YES/NO)

Use "◄ or ►" button to enable or disable overwriting when HDD is full. When HDD overwrite is enabled, the oldest partition on HDD will automatically be reused, and the oldest images will be overwritten the current images. When overwrite mode is disabled, the HDD Full Warning percentage selection will be appeared and need to be configured.

b. HDD FULL WARNING 10% (5% / 10% / 15% / 20%)

Use "◄ or ►" button to select one of the four settings (5% / 10% / 15% / 20%). The default is 10%. The buzzer will turn on when free space left in the HDD go below the set value and alarm again when the total free space left going down each 5%.

c. HDD CAPACITY 76GB

The HDD capacity will be indicated on the screen, it can't be revised.

d. HDD LEFT RATIO 73GB 97%

The HDD left ratio sign will be indicated on the screen, it can't be revised.

e. HDD FORMAT

Use "◄ or ►" button to enter the **HDD FORMAT** menu.

PASSWORD INPUT : _ _ _ _

Use the view control button on the front panel to input the number.

is "1" , is "2" , is "3" , is "4"

When you key in the correct password, the screen will be displayed the following message:

PASSWORD CORRECT!
HARD DISK FORMATTED

Otherwise, the following error message will be displayed on the screen:

PASSWORD INCORRECT!

CHANGE PASSWORD:

Please refer to "SYSTEM SETUP" → CHANGE PASSWORD.

10. LOAD DEFAULT

```
ARE YOU SURE

> NO
  YES
```

Press ▲ or ▼ key on "DEFAULT SETUP" & ◄ or ► to enter:

Use the ◄ or ► button to select items.

Press the ▲ or ▼ button to confirm the selection.

Press MENU back to SETUP MENU.

a. NO

Do not load default

b. YES

Use ◄ or ► button to restore default settings after changing Time, Date &/or HDD.

11. EXIT

Exit from the **SETUP MENU**.

OPERATION PROCEDURES

1 Getting Started with your machine

Please assure the following instructions before you switch on the machine:

1.1 Voltage check: Before power cable is connected, please check the voltage of this appliance against the supply.

Adapter input voltage range 100~240V, frequency range 47-63Hz.

CAUTION - Damage would be caused if incorrect power voltage applied.

1.2 Hard Disk connection: Make sure the 40-Pin Hard Disk Data cable and the 4-Pin power connectors are properly connected.

2 Recording

2.1 Press the ●**REC** key to enter the Recording Mode. And press the ■**STOP** key to stop recording.

2.2 On information bar the "MUX" or "QUAD sign will be indicated on the screen, it means you select MUX or QUAD recording.

2.3 "15P" sign will be indicated in top right corner on the screen, it mean the recording speed you selected. 15P means 15 fields per second.

2.4 O" sign will be indicated in center corner on the screen, it means the marked channel is recorded.

2.5 For more information on Setting up Recording Mode, refer to Chapter 3 Record Setup

2.6 In Recording Mode, if there is a power failure or power lost for any reasons that cause a shut down of this machine, it will be back to the Recording Mode automatically when power restored.

3 Playback

PLAYBACK TYPE SELECT

>TIME SEARCH
EVENT LIST
EXIT

Press the ►PLAY button to into playback mode, There are two ways for searching for video records, use "▲" or "▼" key to select a way for searching, there are two selections "TIME SEARCH" and "EVENT LIST". Arrow mark ">" indicates current selection, press "◄" or "►" key to start the search.

3.1 Time Search：

```
TIME  SEARCH

START TIME: 2007/JAN/05  08:40:34
                          ^

START TIME：2007/JAN/01  08:12:03
  END TIME：2007/JAN/05  12:10:55
```

When entered "TIME SEARCH" mode, screen will indicates the earliest record on corresponding hard drive with title "START TIME" and "END TIME". Use "◀" or "▶" keys to setup condition for time search, an arrow mark "^" will show up on corresponding location for adjustment. Use "▲ "or "▼ "keys to increases or decrease value for search condition on time or date. Press ▶PLAY key to start playing back.

3.2 Event List：

```
EVENT LIST

START TIME: 2007/JAN/01 12:07:00
 END TIME: 2007/JAN/05 10:47:30

> 01 RECORD   2007/JAN/05 09:07:00
  02 MOT CH1  2007/JAN/04 12:06:00
  03 MOT CH2  2007/JAN/04 10:05:00
  04 RECORD   2007/JAN/02 22:04:00
  05 POWER    2007/JAN/01 12:07:00
```

When entered "EVENT LIST" mode. Screen will indicates the event list on corresponding hard drive with the event type, start date & time. Use "▲"or "▼" keys to setup condition for time search, an arrow mark ">" will show up on corresponding location for adjustment. Use "▲ "or "▼"keys to select the event item, and press ▶PLAY key to start playing back.

3.3 Several ways to perform playback:

3.3.1 Press ▶PLAY button to play video forward.

3.3.2 "PLAY" sign will be indicated in top left corner on the screen.

"MUX or QUAD" sign will be indicated in top right corner on the screen, it means the recording mode you selected.

3.3.3 When playback reaches the vary end of record and **"END"**will appear. Press ◀◀Rew Search button to play video reverse at 16 times speed fast rewind mode.

3.3.4 Press ▶▶F.Fwd Search button to play video forward at high speed. Press the button again speed will be change circulative from ×4, ×8, to the highest ×16.

3.3.5 "REW" or "FF* 4 / 8 / 16" sign will be indicated in top left corner on the

screen.

3.3.6 Press **II▶Pause** button to pause (field by field) for forward. This function can be used in full screen and quad mode.

3.3.7 "PAUSE" sign will be indicated in top left corner on the screen.

Press the **■STOP** button to leave playback mode and resume to Live Mode.

Attention: If you choose QUAD recording mode then you cannot playback in full screen mode.

USE HITACHI Hard Disk Drive

Hard disk should be connected, the capacity of hard disk from 80GB to 500GB.

When you restart the power of this appliance after install or replace new hard disk it will format automatically.

			(rpm)
			rpm
			rpm
			rpm
			rpm
			rpm
			rpm
			rpm
			rpm
			rpm

5 VGA Output

VGA output not available, VID-VGA+ external converter is available @ Special Price $79 when HDD is purchased with DVMR

PLAYBACK Via USB

This facility is designed to view / capture segments,
it is not designed to backup-up or view all data on DVMR HDD.

A. INTRODUCTION

YAViewer4 software will allow Viewing/Copying of data recorded on DVR HDD via USB cable.
When DVR is connected to PC, DVR will stop recording and "USB ►►► PC" will show on the DVR screen for HDD data transmission, after unplug the USB connector DVR will boot up automatically.
The YAViewer4 will automatically detect the HDD and show the recorded stream. You can also save the current image to a BMP file, and save the current stream to a stream file [the file extension for the stream file is "MYS"].

The YAViewer4 consists of two functional modules:

View & Backup	Shows stream stored in DVR HDD via USB.
MYS File Player	Plays captured stream file.

B. SYSTEM REQUIREMENT

System Recommendation
Microsoft Windows 2000 or XP.
CPU 1.0 GHz or Higher.
RAM 256 MByte or greater.
DirectX 7.0 or later.

C. INSTALLATION

Hardware Installation
With the USB cable linking DVR and PC via USB ports.

DVR will switch into "USB to PC" mode, after disconnection system will reboot automatically.

PC will detect new USB HDD **if your operating system asks to intialise DVR hard disk when detected 'DO NOT' - cancel initialise !!** all data will be erased if initialised.

As stated above, the application shows stream which is stored in HDD in DVR. Before installing and executing the application, make sure that you have connected DVR to the PC via USB Cable.

Software Installation
Make sure that the OS of your PC is Windows 2000 or XP. Otherwise, the application will not operate properly.
The application is just one execution file. Please copy it to any directory.

2. VIEW & BACKUP

A. EXECUTION

Please double click the execution file. The application first detects physical HDDs installed at your PC and search for HDD among them. This process may take up to 1 minute.

B. USER INTERFACE

The default page of the application is DVR HDD PC Viewer. The user interface as below:

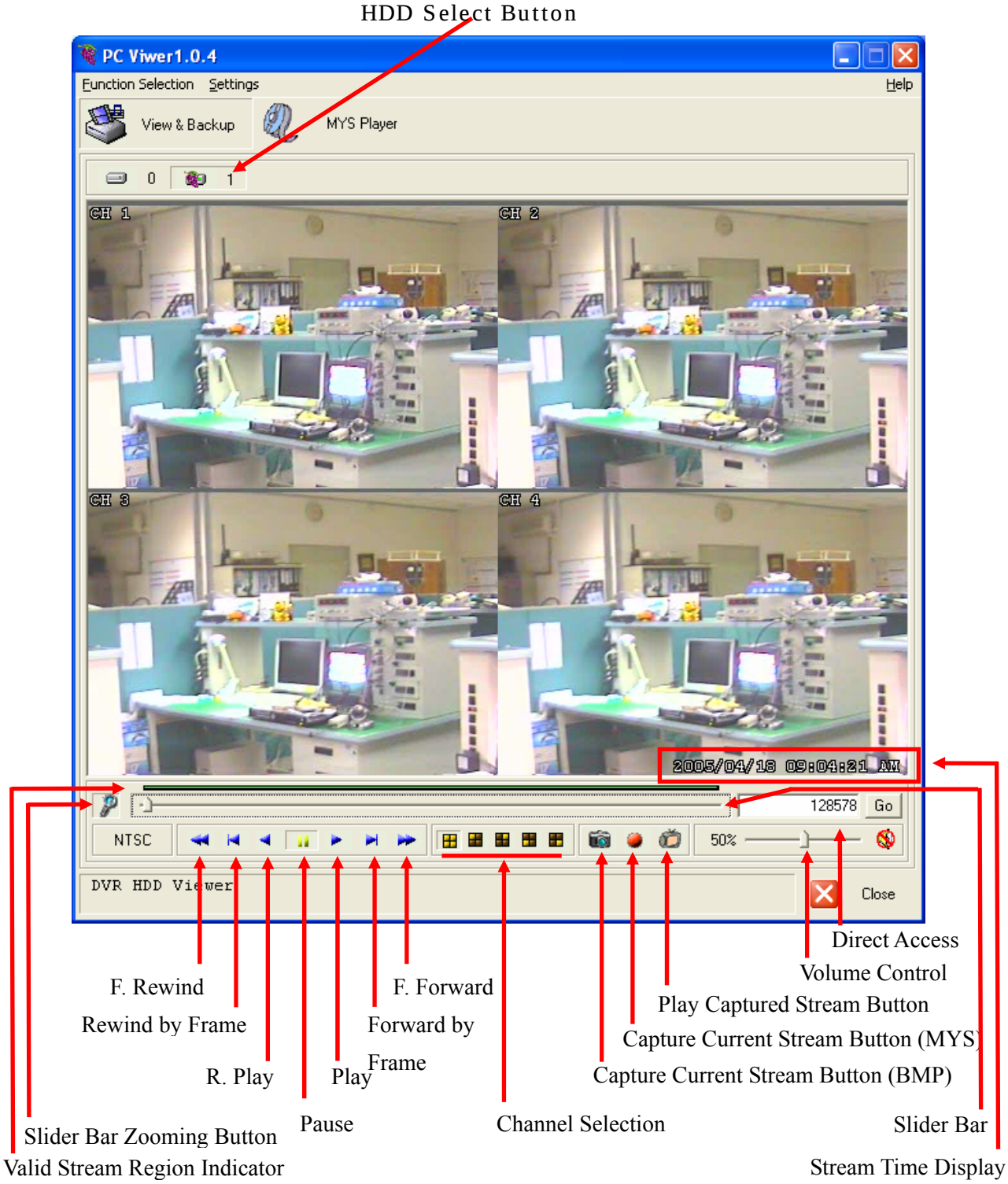

C. FUNCTIONS

I. HDD Select Button

Once the application detects one or more HDDs, it automatically selects the first HDD. You can select any HDD [the HDDs with YAViewer4_Eng marked]. However, you cannot select the normal HDD, which may be Windows-formatted one.

II. Valid Stream Region Indication

Once a HDD is selected, the application detects valid stream region where valid video stream resides. The valid stream region is marked as green within the Valid Stream Region Indicator.

III. Slider Bar Zooming Button

If the Valid Stream Region is relatively too small, you may have difficulty to navigate within it. In this case, we can enlarge (magnify) the Valid Stream Region by clicking Slider Bar Zooming Button.

IV. Playback

Once a HDD is selected, the application automatically displays first screen recorded at the very beginning of it. Then, we can see stream at anywhere within the valid stream reason.

V. Channel Selection

The default screen display channel setting is ALL CHANNEL, which shows all four channel (if the stream has 4 channel streams) at the same time. If want to see a channel only or enlarge one channel, press any channel button.

VI. Capture Current Stream Button (BMP)

For capture image, or backup, current screen, press Capture Current Screen button. Then it will capture the current screen and saves it as BMP file.

VII. Capture Current Stream Button (MYS)

For capture video, or backup, current stream, press Capture Current Stream button. Then it will record the stream you want. It will create .MYS file, whose format is Vineyard Technologies' proprietary stream file format. We can play the recorded file using MYS file player.

VIII. Play Capture Stream Button

MYS Player mode.

IX. Volume Control not applicable to DVMR-4e

Enable/disable audio sounding by clicking "MUTE" button and adjust volume by adjusting Volume slider bar.
<u>For audio optional model only.</u>

X. Direct Access

If the stream stored in a HDD is quite long or difficulty to reach the exact scene to see. If we find a scene you would like to show your friend or report to polis officer later, please remember the number in the Direct Access Input edit box, so that we can go there directly by entering the number in the edit box and pressing "GO" button besides it.

3. MYS PLAYER

A. User Interface

The default page of the application is DVR HDD YAViewer4. The user interface as below:

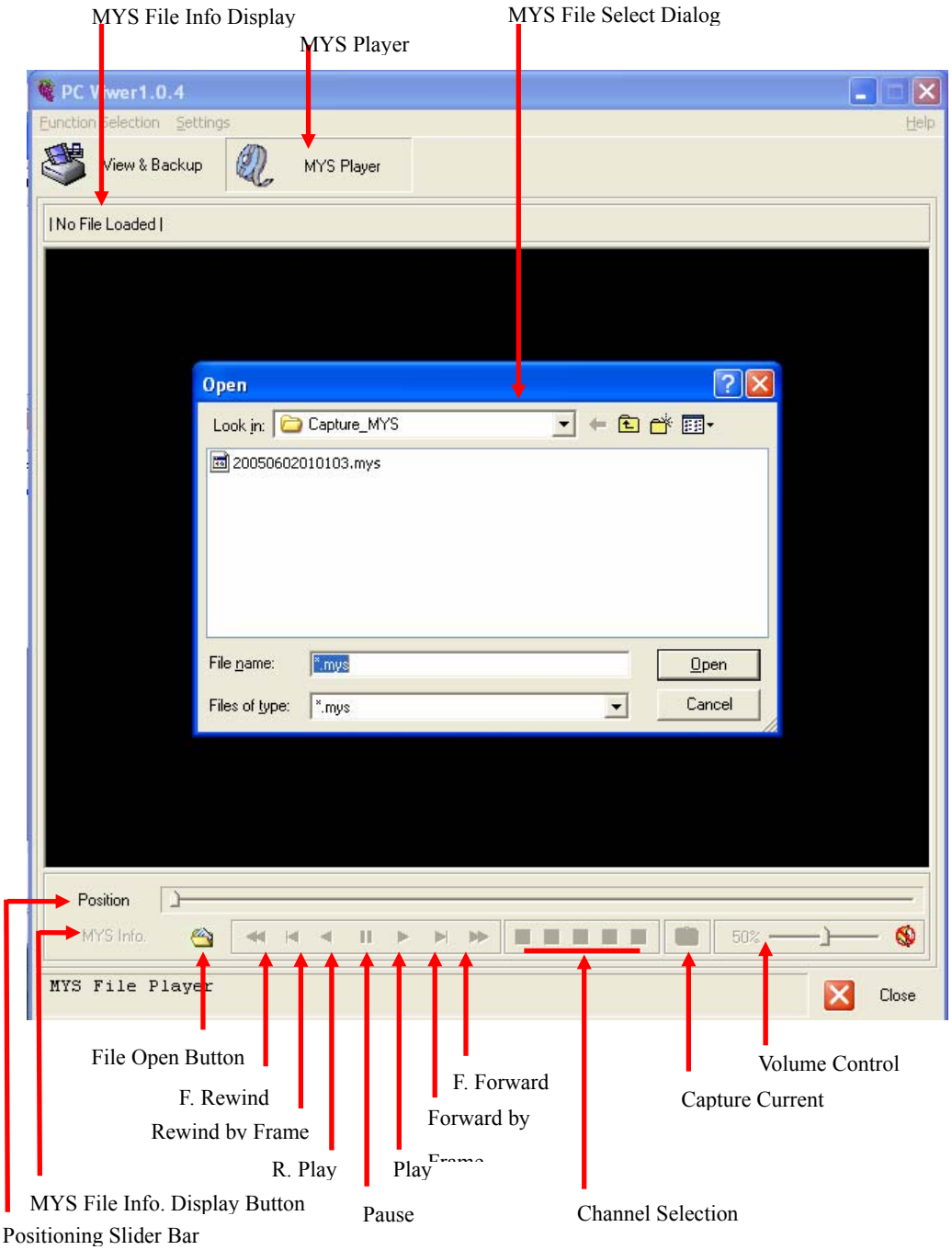

B. FUNCTIONS

I. File Open

Open MYS file by clicking File Open Button.

II. Playback

Once a HDD is selected, the application automatically displays first screen recorded at the very beginning of it. Then, we can see stream at anywhere within the valid stream reason.

III. Channel Selection

The default screen display channel setting is ALL CHANNEL, which shows all four channel (if the stream has 4 channel streams) at the same time. If want to see only one channel as full screen, press channel button.

IV. Capture Current Stream Button (BMP)

For capture image, or backup, current screen, press Capture Current Screen button. Then it will capture the current screen and saves it as BMP file.

V. Volume Control

Enable/disable audio sounding by clicking “MUTE” button and adjust volume by adjusting Volume slider bar.

<u>For audio optional model only.</u>

VI. Position Slider Bar

Slide image position directly.

VII. MYS File Info. Display Button

Showing File Name, Video Mode, File Size, and Frame Count & Current Position at upper left corner.

4. APPLICATION SETTING

A. USER INTERFACE

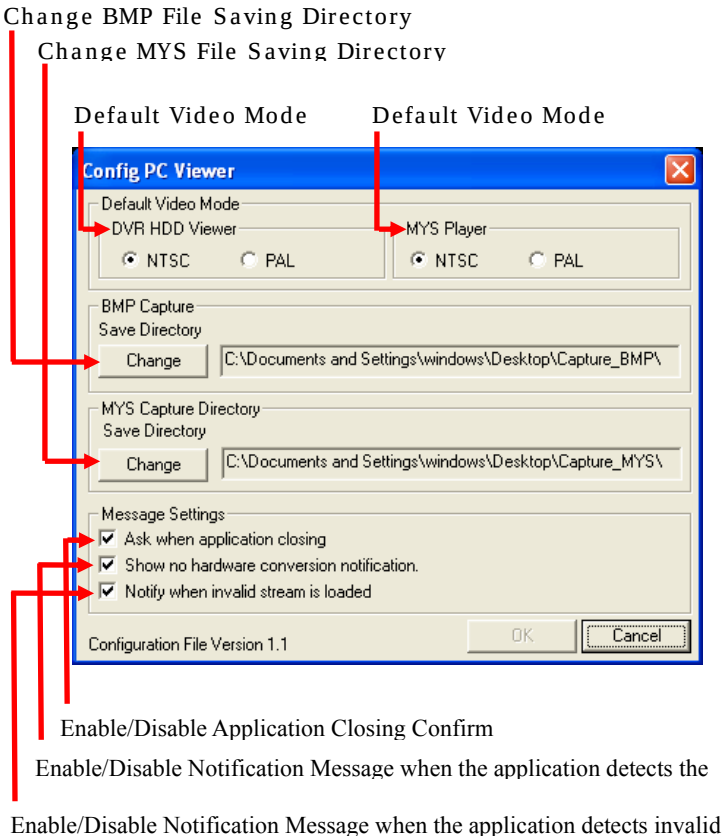

B. FUNCTIONS:

I. Default Video Mode Related Setting
Choose the default video standard.
1. NTSC/PAL Setting for HDD PCVIEWER
2. NTSC/PAL Setting for MYS Player

II. Change BMP File Saving Directory
Press "Change" Button to change the directory where the new BMP capture file will be stored.

III. Change MYS File Saving Directory
Press "Change" button to change the directory where the new MYS stream file will be stored.

IV. Application Closing
Enable/Disable the confirm message box for application closing.

V. Change No Hardware Color Conversion Support Notification
Enable/Disable the notification message when the application detects the graphic device installed is not supporting hardware-aided YUV to RGB color conversion.

VI. Change Invalid Stream Loading Notification
Enable/Disable the warning message when the application [HDD PC Viewer] loads invalid stream data from a hard disk.